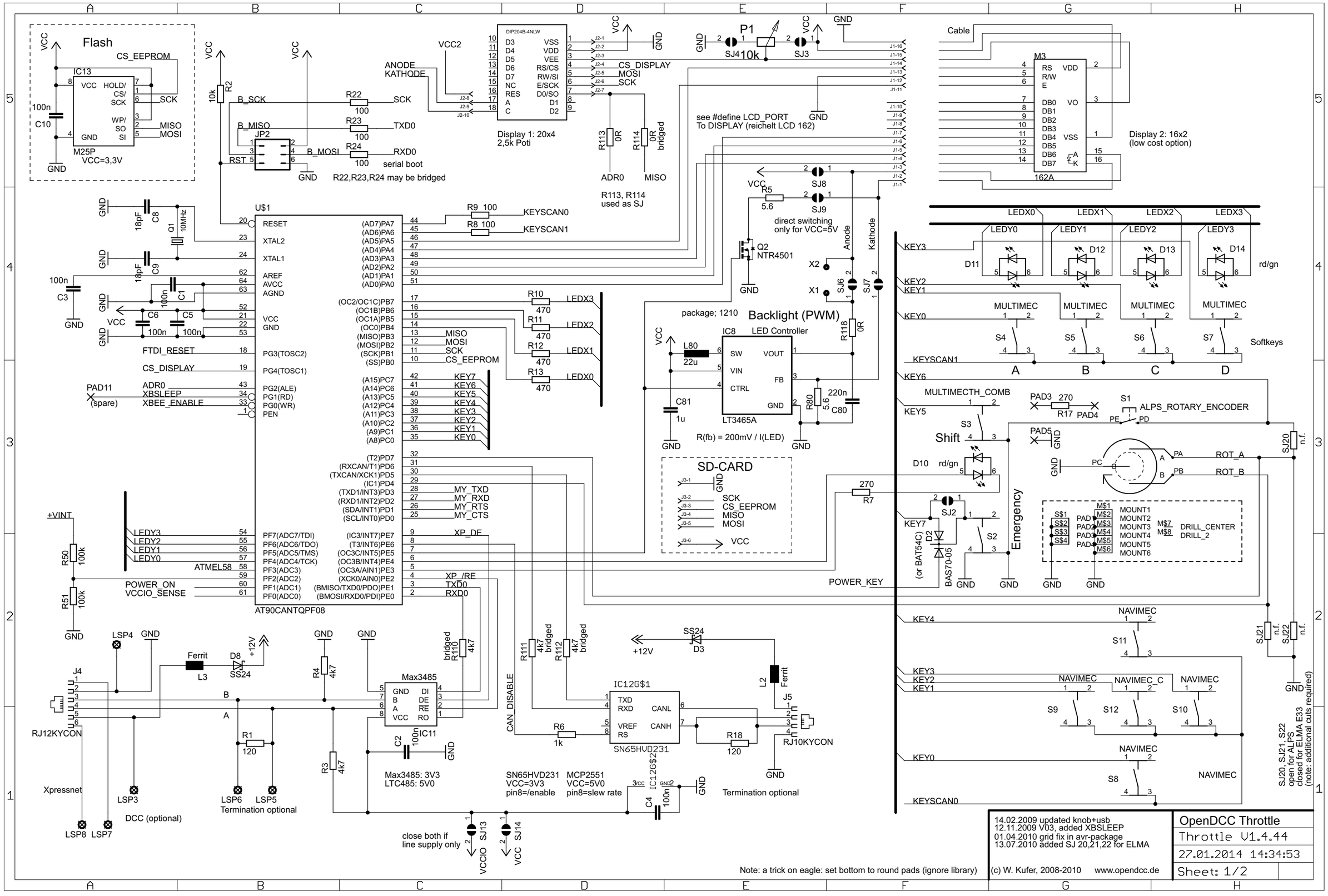
Flash
IC13
M25P
VCC=3,3V
CS_EEPROM
SCK
MISO
MOSI
B_SCK
B_MISO
B_MOSI
RST
JP2
R22,R23,R24 may be bridged
serial boot
TXD0
RXD0
ANODE
KATHODE
DIP204B-4NLW
Display 1: 20x4
2,5k Poti
CS_DISPLAY
ADR0
R113, R114
used as SJ
see #define LCD_PORT
To DISPLAY (reichelt LCD 162)
Cable
M3
162A
Display 2: 16x2
(low cost option)
U$1
AT90CANTQPF08
ATMEL58
KEYSCAN0
KEYSCAN1
FTDI_RESET
PAD11
(spare)
XBSLEEP
XBEE_ENABLE
POWER_ON
VCCIO_SENSE
MY_TXD
MY_RXD
MY_RTS
MY_CTS
XP_DE
XP_/RE
direct switching
only for VCC=5V
Q2
NTR4501
Backlight (PWM)
IC8
LED Controller
LT3465A
package; 1210
R(fb) = 200mV / I(LED)
SD-CARD
LEDX0
LEDX1
LEDX2
LEDX3
LEDY0
LEDY1
LEDY2
LEDY3
rd/gn
MULTIMEC
Softkeys
MULTIMECTH_COMB
Shift
ALPS_ROTARY_ENCODER
ROT_A
ROT_B
Emergency
POWER_KEY
MOUNT1
MOUNT2
MOUNT3
MOUNT4
MOUNT5
MOUNT6
DRILL_CENTER
DRILL_2
NAVIMEC
NAVIMEC_C
SJ20, SJ21, S22
open for ALPS
closed for ELMA E33
(note: additional cuts required)
+VINT
RJ12KYCON
Xpressnet
DCC (optional)
Termination optional
Max3485
Max3485: 3V3
LTC485: 5V0
IC12G$1
SN65HVD231
SN65HVD231 VCC=3V3 pin8=/enable
MCP2551 VCC=5V0 pin8=slew rate
CAN_DISABLE
RJ10KYCON
close both if
line supply only
Note: a trick on eagle: set bottom to round pads (ignore library)
14.02.2009 updated knob+usb
12.11.2009 V03, added XBSLEEP
01.04.2010 grid fix in avr-package
13.07.2010 added SJ 20,21,22 for ELMA
(c) W. Kufer, 2008-2010
www.opendcc.de
OpenDCC Throttle
Throttle V1.4.44
27.01.2014 14:34:53
Sheet: 1/2

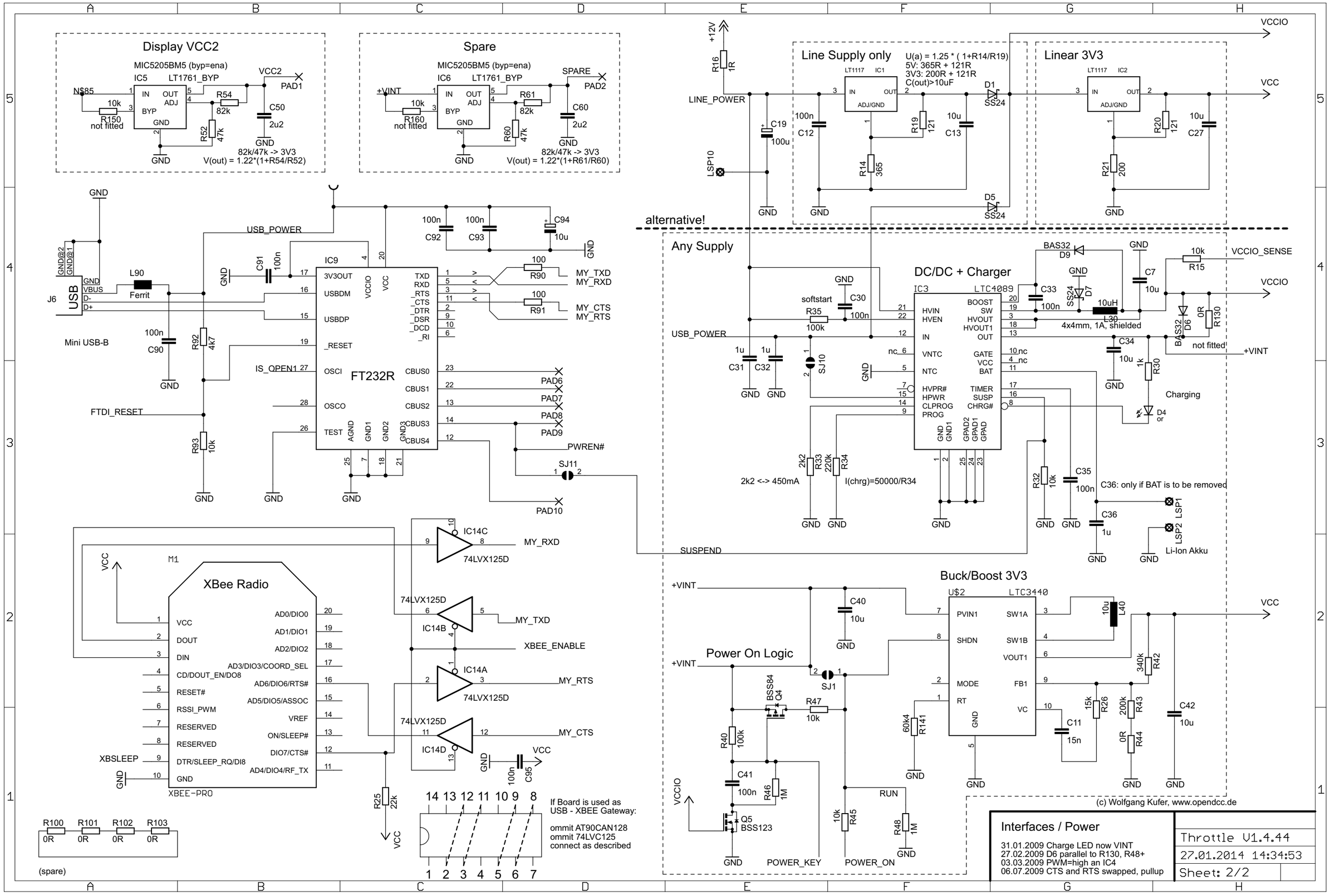
Display VCC2
MIC5205BM5 (byp=ena)
IC5 LT1761_BYP
VCC2
PAD1
NS85
R150 10k not fitted
R54 82k
R52 47k
C50 2u2
82k/47k -> 3V3
V(out) = 1.22*(1+R54/R52)
Spare
MIC5205BM5 (byp=ena)
IC6 LT1761_BYP
SPARE
PAD2
+VINT
R160 10k not fitted
R61 82k
R60 47k
C60 2u2
82k/47k -> 3V3
V(out) = 1.22*(1+R61/R60)
+12V
R16 1R
LINE_POWER
LSP10
C19 100u
Line Supply only
U(a) = 1.25 * (1+R14/R19)
5V: 365R + 121R
3V3: 200R + 121R
C(out)>10uF
LT1117 IC1
C12 100n
R19 121
R14 365
C13 10u
D1 SS24
D5 SS24
Linear 3V3
LT1117 IC2
R20 121
R21 200
C27 10u
VCCIO
VCC
alternative!
Any Supply
DC/DC + Charger
IC3 LTC4089
softstart
R35 100k
C30 100n
USB_POWER
C31 1u
C32 1u
SJ10
2k2 <-> 450mA
R33 2k2
R34 220k
I(chrg)=50000/R34
BAS32 D9
SS24 D7
C33 100n
L30 10uH
4x4mm, 1A, shielded
C7 10u
R15 10k
VCCIO_SENSE
BAS32 D6
R130 0R
not fitted
+VINT
C34 10u
R30 1k
Charging
D4 or
R32 10k
C35 100n
C36: only if BAT is to be removed
C36 1u
LSP1
LSP2
Li-Ion Akku
SUSPEND
Buck/Boost 3V3
U$2 LTC3440
C40 10u
L40 10u
R42 340k
R43 200k
R44 0R
R26 15k
C11 15n
C42 10u
R141 60k4
Power On Logic
SJ1
BSS84 Q4
R47 10k
R40 100k
C41 100n
R46 1M
Q5 BSS123
R45 10k
R48 1M
RUN
POWER_KEY
POWER_ON
(c) Wolfgang Kufer, www.opendcc.de
GND
USB_POWER
J6 USB
Mini USB-B
L90 Ferrit
C91 100n
C92 100n
C93 100n
C94 10u
IC9 FT232R
3V3OUT
USBDM
USBDP
_RESET
OSCI
OSCO
TEST
VCCIO
VCC
TXD
RXD
_RTS
_CTS
_DTR
_DSR
_DCD
_RI
CBUS0
CBUS1
CBUS2
CBUS3
CBUS4
AGND
GND1
GND2
GND3
R90 100
R91 100
MY_TXD
MY_RXD
MY_CTS
MY_RTS
C90 100n
R92 4k7
IS_OPEN1
FTDI_RESET
R93 10k
PAD6
PAD7
PAD8
PAD9
PWREN#
SJ11
PAD10
M1
XBee Radio
XBEE-PRO
VCC
DOUT
DIN
CD/DOUT_EN/DO8
RESET#
RSSI_PWM
RESERVED
RESERVED
DTR/SLEEP_RQ/DI8
GND
XBSLEEP
AD0/DIO0
AD1/DIO1
AD2/DIO2
AD3/DIO3/COORD_SEL
AD6/DIO6/RTS#
AD5/DIO5/ASSOC
VREF
ON/SLEEP#
DIO7/CTS#
AD4/DIO4/RF_TX
IC14C 74LVX125D
IC14B 74LVX125D
IC14A 74LVX125D
IC14D 74LVX125D
XBEE_ENABLE
C95 100n
R25 22k
R100 0R
R101 0R
R102 0R
R103 0R
(spare)
If Board is used as
USB - XBEE Gateway:
ommit AT90CAN128
ommit 74LVC125
connect as described
Interfaces / Power
31.01.2009 Charge LED now VINT
27.02.2009 D6 parallel to R130, R48+
03.03.2009 PWM=high an IC4
06.07.2009 CTS and RTS swapped, pullup
Throttle V1.4.44
27.01.2014 14:34:53
Sheet: 2/2