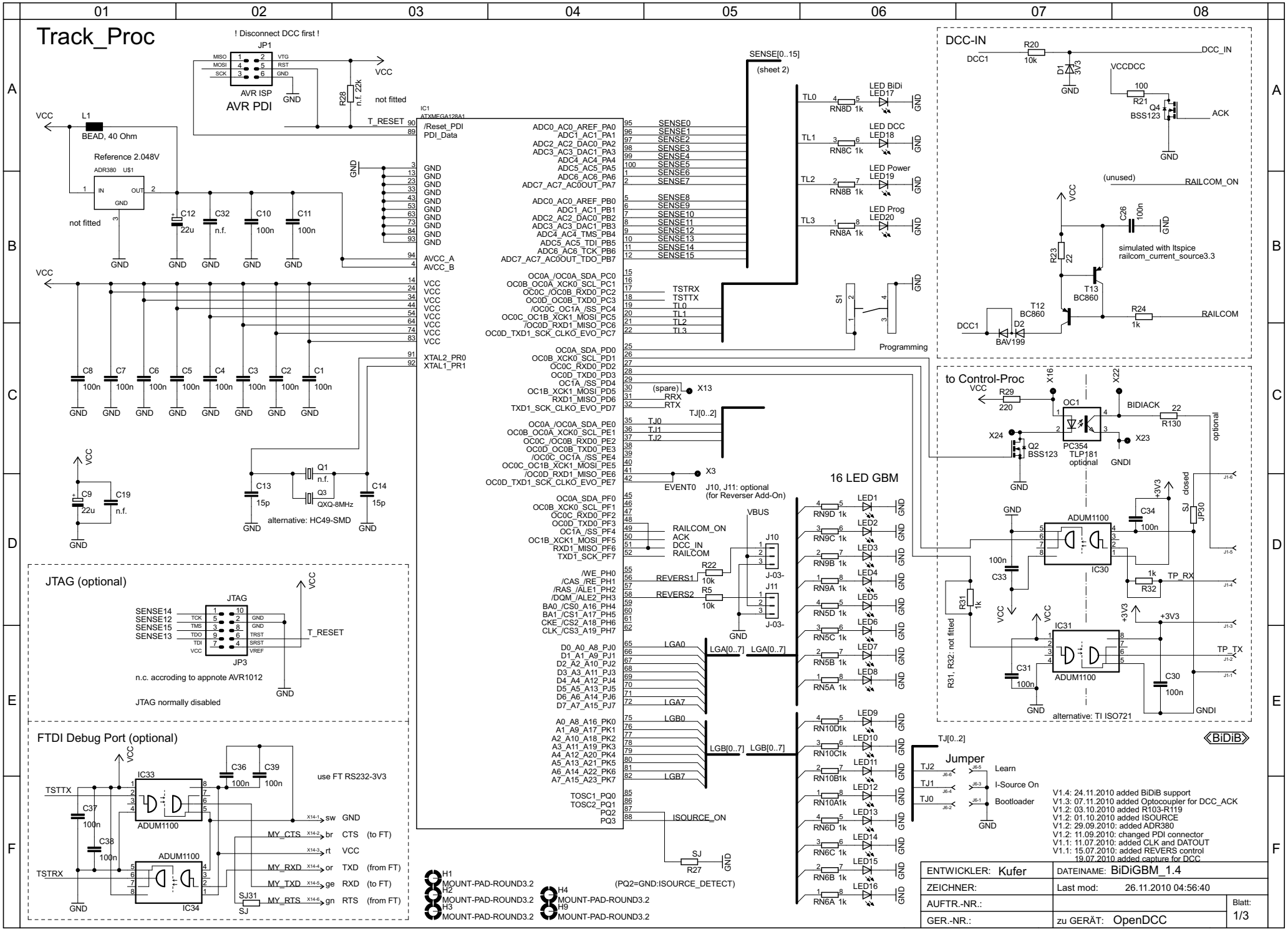
Track_Proc
! Disconnect DCC first !
JP1
AVR ISP
AVR PDI
MISO
MOSI
SCK
VTG
RST
GND
VCC
R28
n.f. 22k
not fitted
T_RESET
IC1
ATXMEGA128A1
/Reset_PDI
PDI_Data
L1
BEAD, 40 Ohm
Reference 2.048V
ADR380 U$1
IN
OUT
not fitted
C12
22u
C32
n.f.
C10
100n
C11
100n
AVCC_A
AVCC_B
XTAL2_PR0
XTAL1_PR1
C8
C7
C6
C5
C4
C3
C2
C1
C9
22u
C19
n.f.
C13
15p
C14
15p
Q1
n.f.
Q3
QXQ-8MHz
alternative: HC49-SMD
SENSE[0..15]
(sheet 2)
TSTRX
TSTTX
TL0
TL1
TL2
TL3
LED BiDi
LED17
LED DCC
LED18
LED Power
LED19
LED Prog
LED20
RN8D 1k
RN8C 1k
RN8B 1k
RN8A 1k
S1
Programming
(spare)
X13
RRX
RTX
TJ[0..2]
TJ0
TJ1
TJ2
X3
EVENT0
J10, J11: optional
(for Reverser Add-On)
VBUS
J10
J11
J-03-
RAILCOM_ON
ACK
DCC_IN
RAILCOM
REVERS1
REVERS2
R22
10k
R5
10k
16 LED GBM
LED1
LED2
LED3
LED4
LED5
LED6
LED7
LED8
LED9
LED10
LED11
LED12
LED13
LED14
LED15
LED16
RN9D 1k
RN9C 1k
RN9B 1k
RN9A 1k
RN5D 1k
RN5C 1k
RN5B 1k
RN5A 1k
RN10D1k
RN10C1k
RN10B1k
RN10A1k
RN6D 1k
RN6C 1k
RN6B 1k
RN6A 1k
LGA0
LGA[0..7]
LGA7
LGB0
LGB[0..7]
LGB7
TOSC1_PQ0
TOSC2_PQ1
PQ2
PQ3
ISOURCE_ON
SJ
R27
(PQ2=GND:ISOURCE_DETECT)
H1
H2
H3
H4
H9
MOUNT-PAD-ROUND3.2
DCC-IN
DCC1
R20
10k
D1
3V3
DCC_IN
VCCDCC
100
R21
Q4
BSS123
ACK
(unused)
RAILCOM_ON
C26
100n
R23
22
simulated with ltspice
railcom_current_source3.3
T13
BC860
T12
BC860
R24
1k
RAILCOM
D2
BAV199
to Control-Proc
R29
220
X16
X22
OC1
BIDIACK
22
R130
optional
X24
Q2
BSS123
PC354
TLP181
optional
X23
GNDI
ADUM1100
IC30
C34
100n
SJ
closed
JP30
C33
100n
R31
1k
R32
1k
TP_RX
TP_TX
IC31
ADUM1100
C31
100n
C30
100n
R31, R32: not fitted
alternative: TI ISO721
BiDiB
JTAG (optional)
JTAG
SENSE14
SENSE12
SENSE15
SENSE13
TCK
TMS
TDO
TDI
VCC
GND
TRST
SRST
VREF
JP3
n.c. accroding to appnote AVR1012
JTAG normally disabled
FTDI Debug Port (optional)
IC33
ADUM1100
IC34
C36
100n
C39
100n
C37
100n
C38
100n
TSTTX
TSTRX
use FT RS232-3V3
sw GND
MY_CTS br CTS (to FT)
rt VCC
MY_RXD or TXD (from FT)
MY_TXD ge RXD (to FT)
MY_RTS gn RTS (from FT)
SJ31
SJ
Jumper
TJ2
TJ1
TJ0
Learn
I-Source On
Bootloader
V1.4: 24.11.2010 added BiDiB support
V1.3: 07.11.2010 added Optocoupler for DCC_ACK
V1.2: 03.10.2010 added R103-R119
V1.2: 01.10.2010 added ISOURCE
V1.2: 29.09.2010: added ADR380
V1.2: 11.09.2010: changed PDI connector
V1.1: 11.07.2010: added CLK and DATOUT
V1.1: 15.07.2010: added REVERS control
19.07.2010 added capture for DCC
ENTWICKLER: Kufer
DATEINAME: BiDiGBM_1.4
ZEICHNER:
Last mod: 26.11.2010 04:56:40
AUFTR.-NR.:
GER.-NR.:
zu GERÄT: OpenDCC
Blatt:
1/3

Track, Sensors, Power

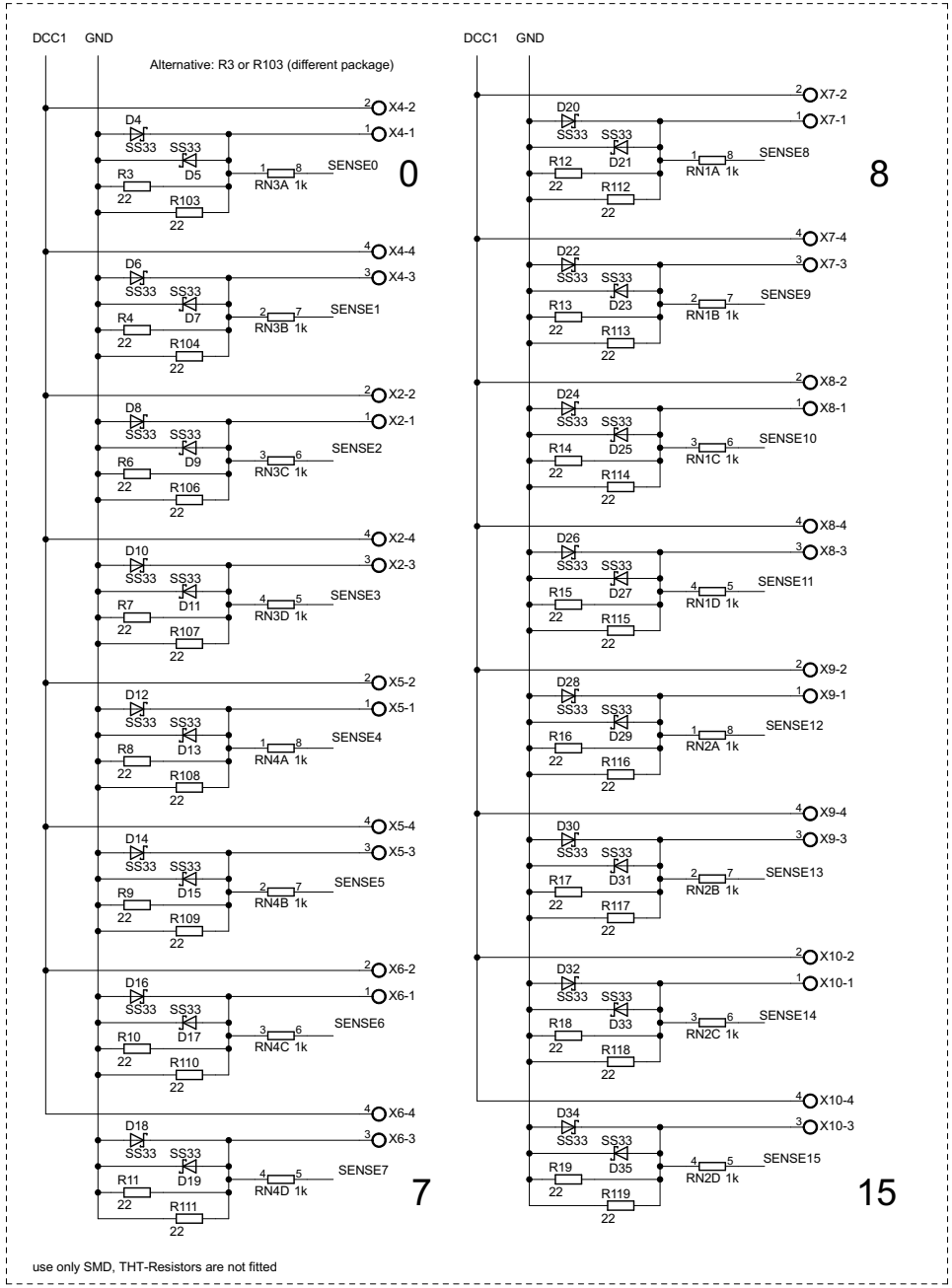

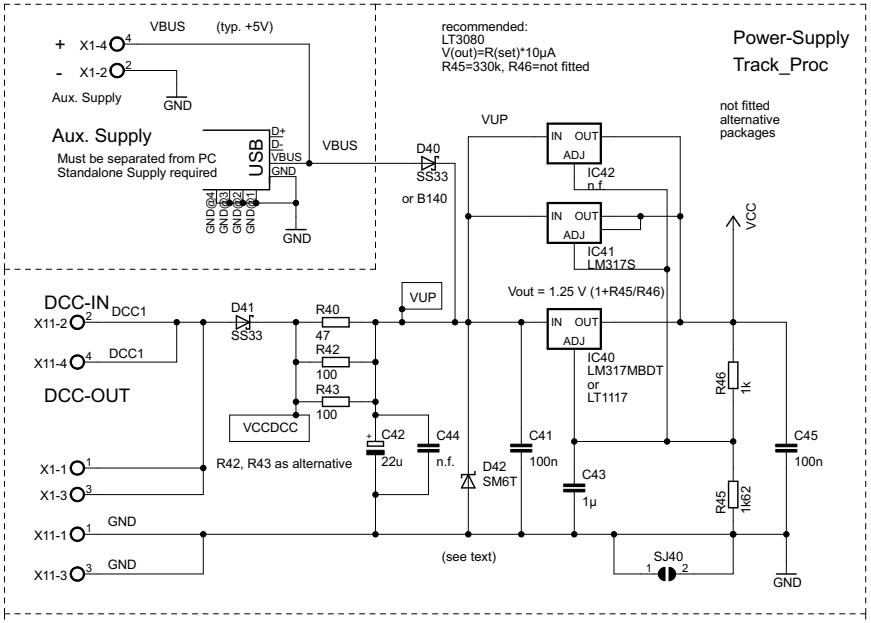

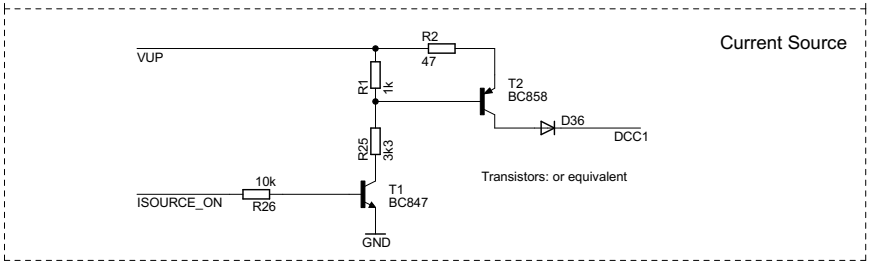

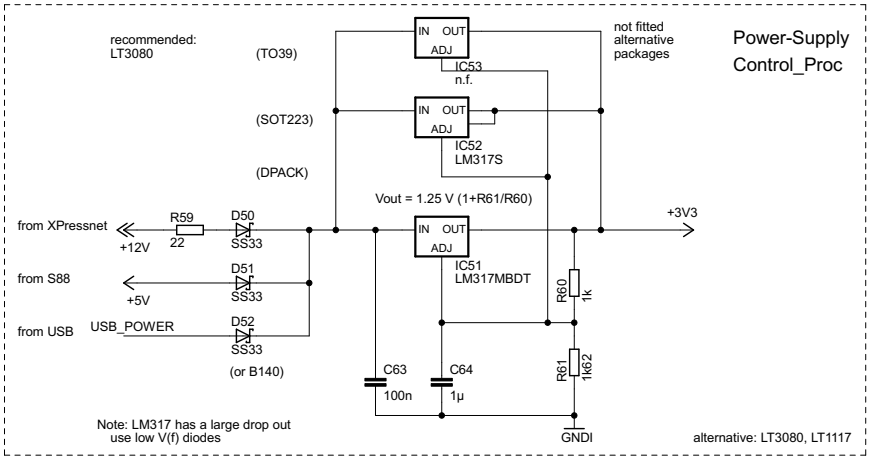

ENTWICKLER: Kufer	DATEINAME: BiDiGBM_1.4		
ZEICHNER:	Last mod: 26.11.2010 04:56:40		
AUFTR.-NR.:		Blatt:	
GER.-NR.:	zu GERÄT: OpenDCC	2/3	
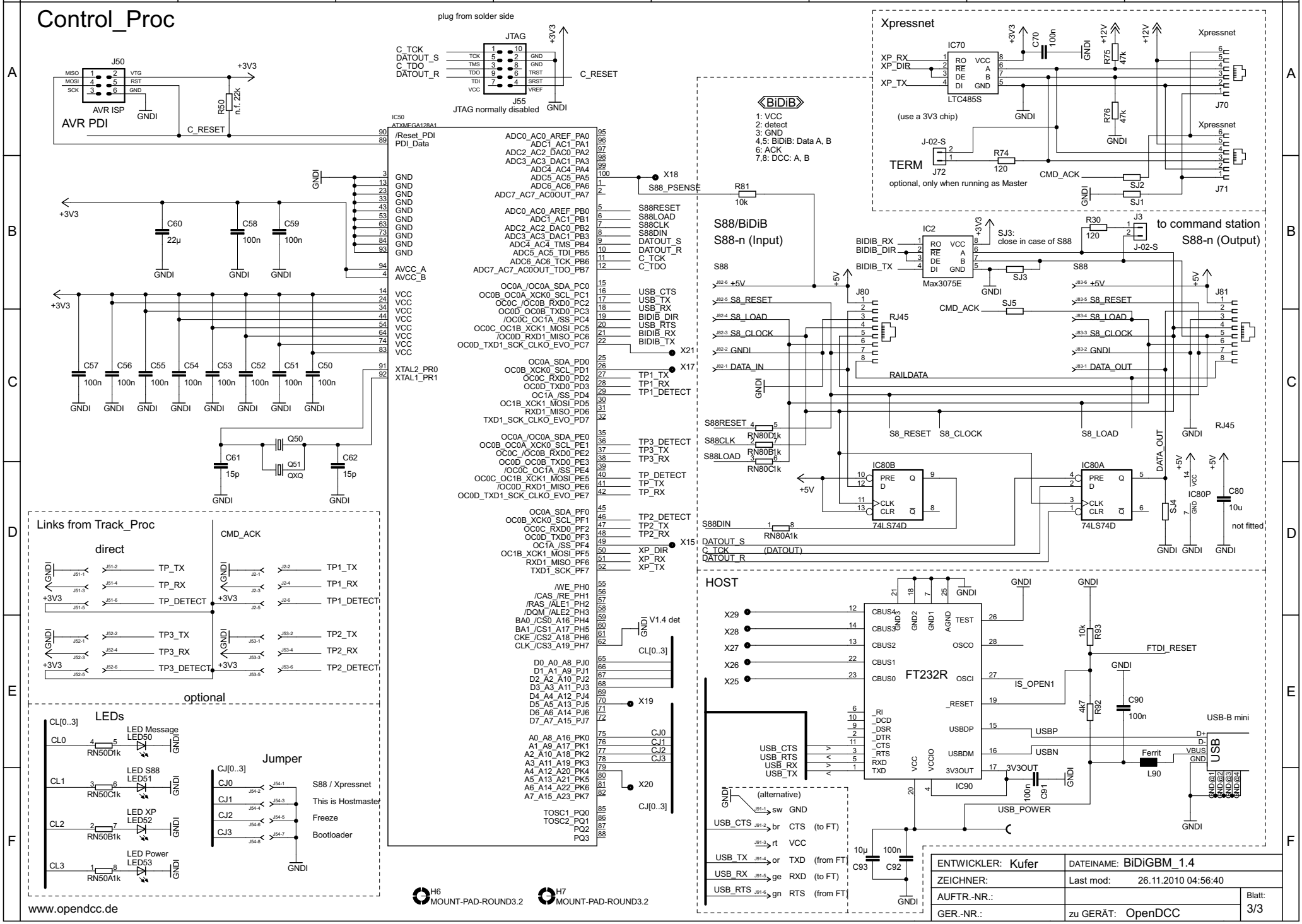
Control_Proc