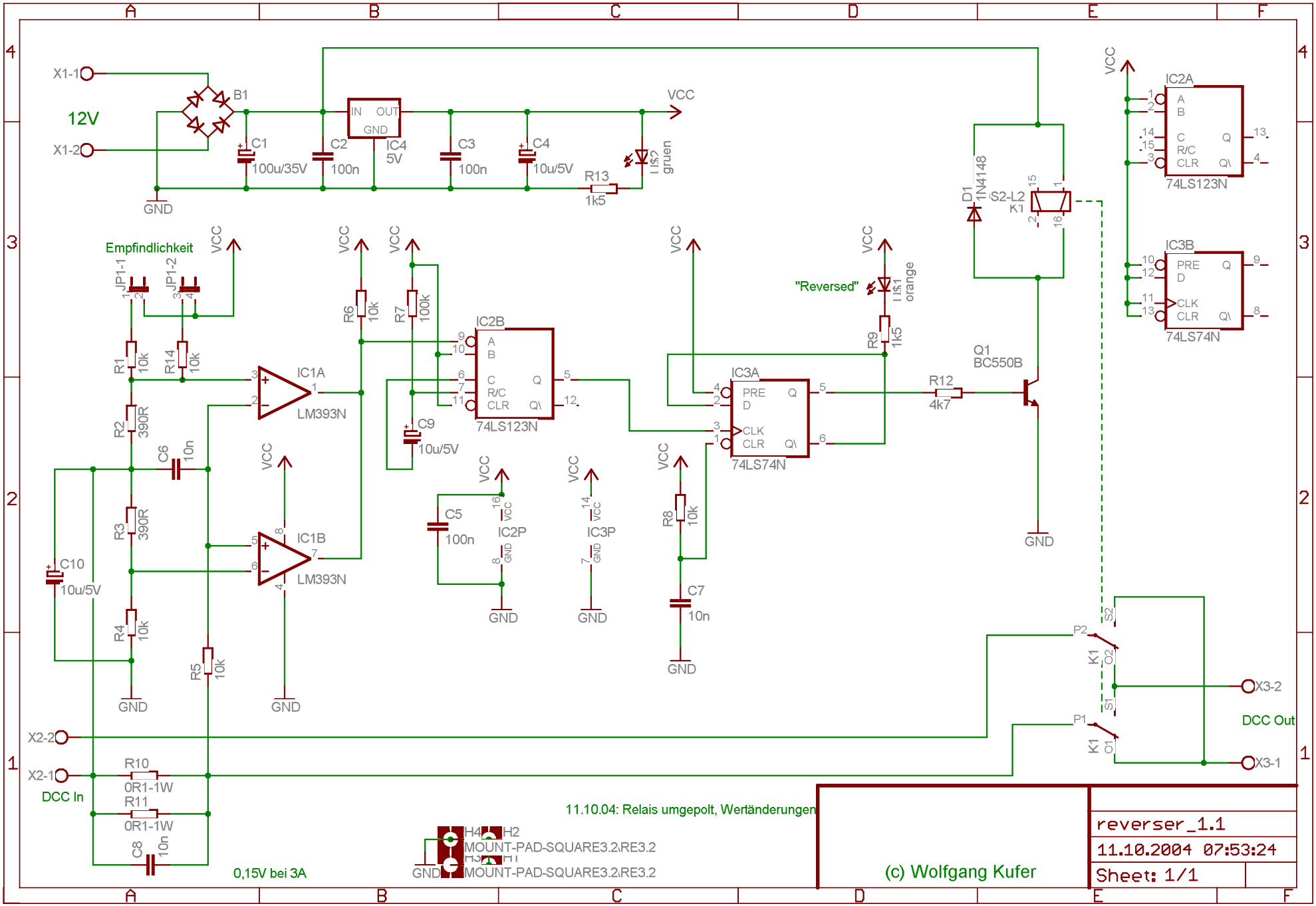
X1-1
X1-2
12V
B1
C1
100u/35V
C2
100n
IC4
5V
IN
OUT
GND
C3
100n
C4
10u/5V
VCC
R13
1k5
LED2
gruen
GND
Empfindlichkeit
JP1-1
JP1-2
R1
10k
R14
10k
R2
390R
R3
390R
R4
10k
C6
10n
C10
10u/5V
R5
10k
IC1A
LM393N
IC1B
LM393N
R6
10k
R7
100k
C9
10u/5V
IC2B
74LS123N
C5
100n
IC2P
IC3P
IC3A
74LS74N
R8
10k
C7
10n
"Reversed"
LED1
orange
R9
1k5
R12
4k7
Q1
BC550B
D1
1N4148
S2-L2
K1
IC2A
74LS123N
IC3B
74LS74N
P2
P1
K1
S2
S1
O2
O1
X3-2
X3-1
DCC Out
X2-2
X2-1
DCC In
R10
0R1-1W
R11
0R1-1W
C8
10n
0,15V bei 3A
11.10.04: Relais umgepolt, Wertänderungen
H4
H2
H3
H1
MOUNT-PAD-SQUARE3.2\RE3.2
MOUNT-PAD-SQUARE3.2\RE3.2
(c) Wolfgang Kufer
reverser_1.1
11.10.2004 07:53:24
Sheet: 1/1