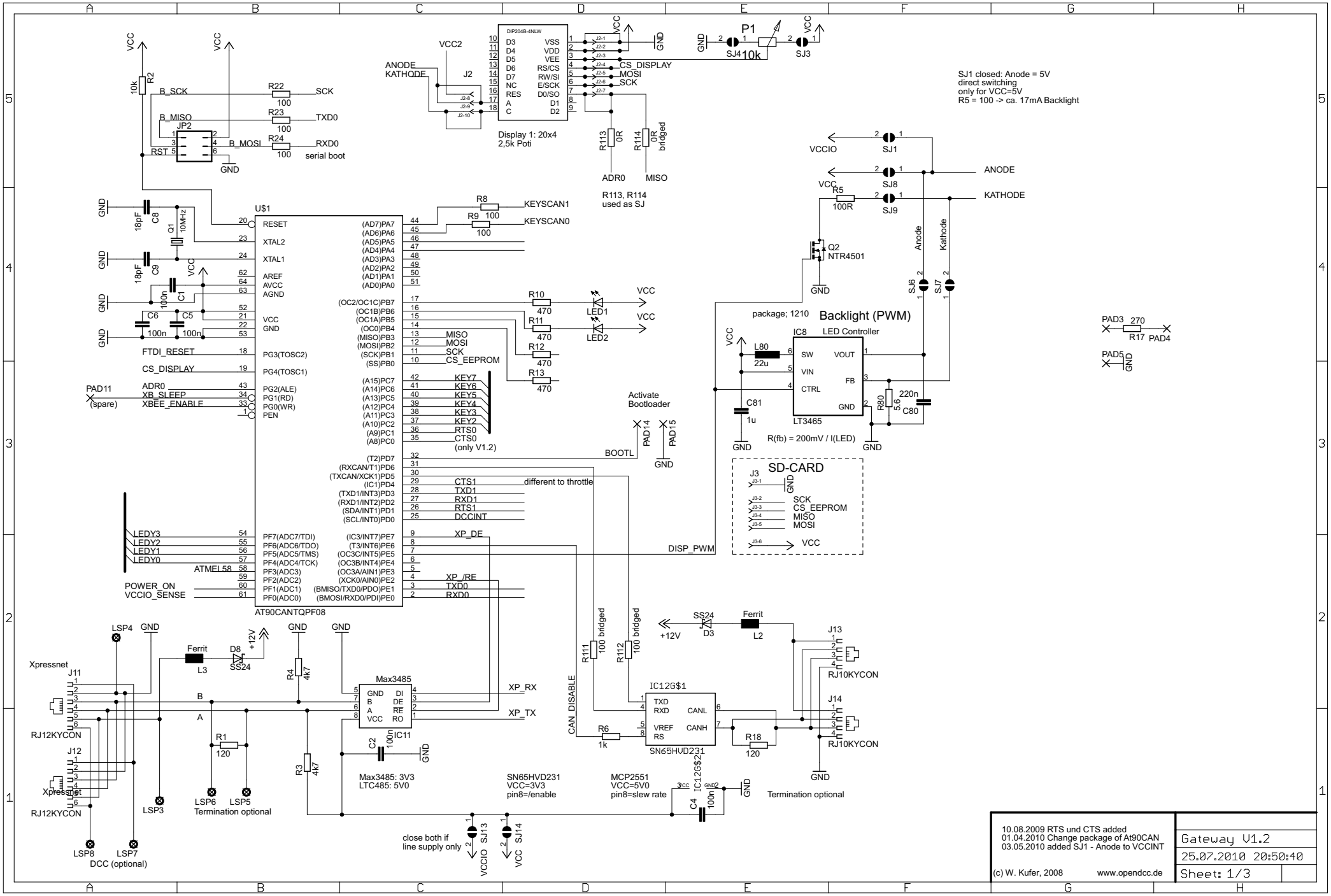
SJ1 closed: Anode = 5V
direct switching
only for VCC=5V
R5 = 100 -> ca. 17mA Backlight
Display 1: 20x4
2,5k Poti
R113, R114
used as SJ
U$1
AT90CANTQPF08
ATMEL58
Backlight (PWM)
LED Controller
LT3465
R(fb) = 200mV / I(LED)
SD-CARD
Activate
Bootloader
different to throttle
Max3485
Max3485: 3V3
LTC485: 5V0
IC12G$1
SN65HVD231
SN65HVD231
VCC=3V3
pin8=/enable
MCP2551
VCC=5V0
pin8=slew rate
Termination optional
close both if
line supply only
DCC (optional)
serial boot
10.08.2009 RTS und CTS added
01.04.2010 Change package of At90CAN
03.05.2010 added SJ1 - Anode to VCCINT
(c) W. Kufer, 2008
www.opendcc.de
Gateway V1.2
25.07.2010 20:50:40
Sheet: 1/3

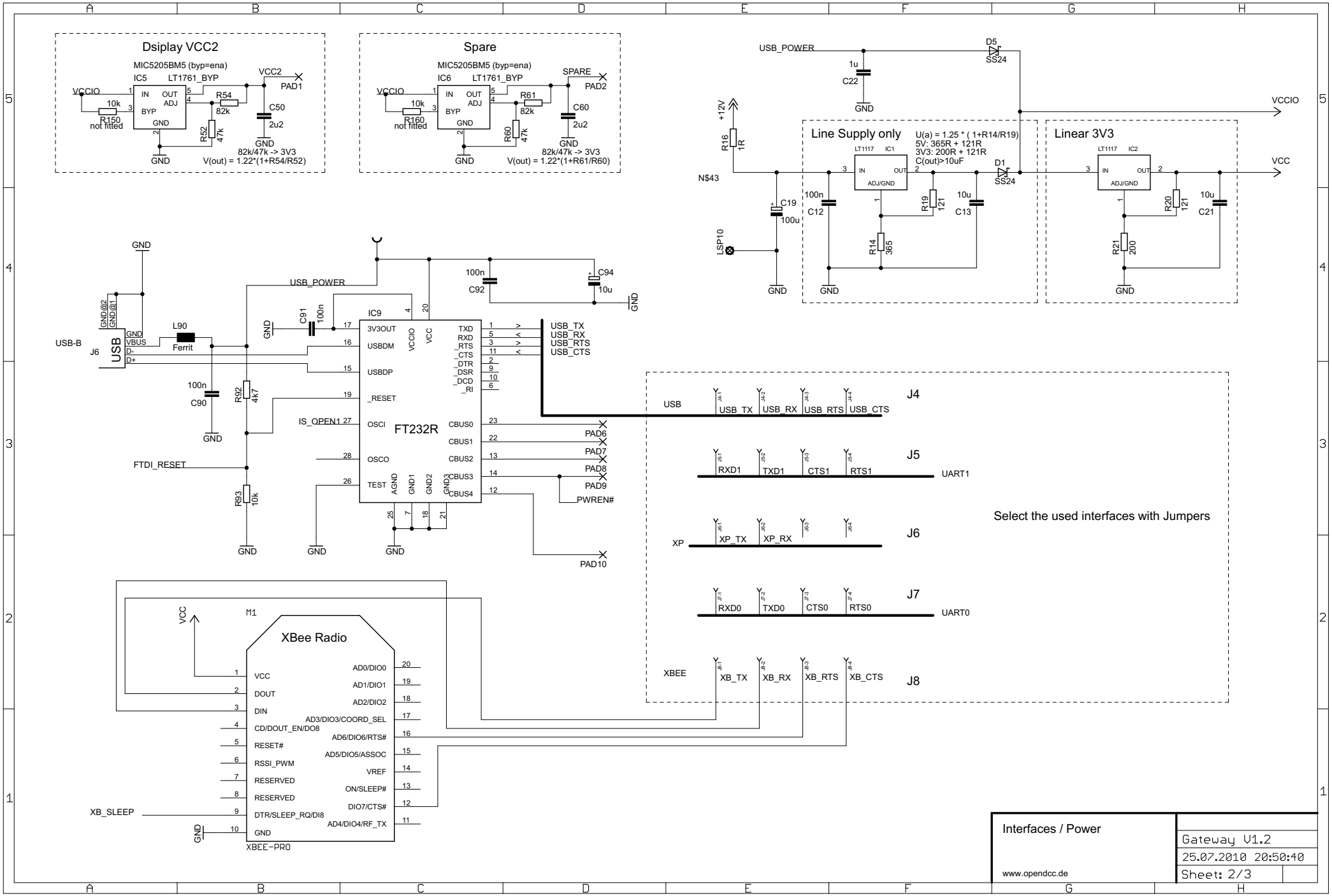
Dsiplay VCC2
MIC5205BM5 (byp=ena)
IC5 LT1761_BYP
VCC2
PAD1
VCCIO
10k
R150
not fitted
IN
OUT
ADJ
BYP
GND
R54
82k
R52
47k
C50
2u2
GND
82k/47k -> 3V3
V(out) = 1.22*(1+R54/R52)
Spare
MIC5205BM5 (byp=ena)
IC6 LT1761_BYP
SPARE
PAD2
R160
not fitted
R61
82k
R60
47k
C60
2u2
82k/47k -> 3V3
V(out) = 1.22*(1+R61/R60)
USB_POWER
D5
SS24
1u
C22
+12V
R16
1R
N$43
C19
100u
LSP10
Line Supply only
U(a) = 1.25 * (1+R14/R19)
5V: 365R + 121R
3V3: 200R + 121R
C(out)>10uF
LT1117 IC1
ADJ/GND
100n
C12
R19
121
10u
C13
R14
365
D1
SS24
VCCIO
Linear 3V3
LT1117 IC2
VCC
R20
121
10u
C21
R21
200
USB-B
J6
USB
GND@2
GND@1
VBUS
D-
D+
L90
Ferrit
100n
C90
R92
4k7
R93
10k
FTDI_RESET
IS_OPEN1
IC9
FT232R
3V3OUT
USBDM
USBDP
_RESET
OSCI
OSCO
TEST
VCCIO
VCC
TXD
RXD
_RTS
_CTS
_DTR
_DSR
_DCD
_RI
CBUS0
CBUS1
CBUS2
CBUS3
CBUS4
AGND
GND1
GND2
GND3
USB_TX
USB_RX
USB_RTS
USB_CTS
100n
C92
C94
10u
C91
100n
PAD6
PAD7
PAD8
PAD9
PWREN#
PAD10
USB
J4
RXD1
TXD1
CTS1
RTS1
UART1
J5
XP
XP_TX
XP_RX
J6
RXD0
TXD0
CTS0
RTS0
UART0
J7
XBEE
XB_TX
XB_RX
XB_RTS
XB_CTS
J8
Select the used interfaces with Jumpers
M1
XBee Radio
VCC
DOUT
DIN
CD/DOUT_EN/DO8
RESET#
RSSI_PWM
RESERVED
RESERVED
DTR/SLEEP_RQ/DI8
GND
AD0/DIO0
AD1/DIO1
AD2/DIO2
AD3/DIO3/COORD_SEL
AD6/DIO6/RTS#
AD5/DIO5/ASSOC
VREF
ON/SLEEP#
DIO7/CTS#
AD4/DIO4/RF_TX
XB_SLEEP
XBEE-PRO
Interfaces / Power
www.opendcc.de
Gateway V1.2
25.07.2010 20:50:40
Sheet: 2/3

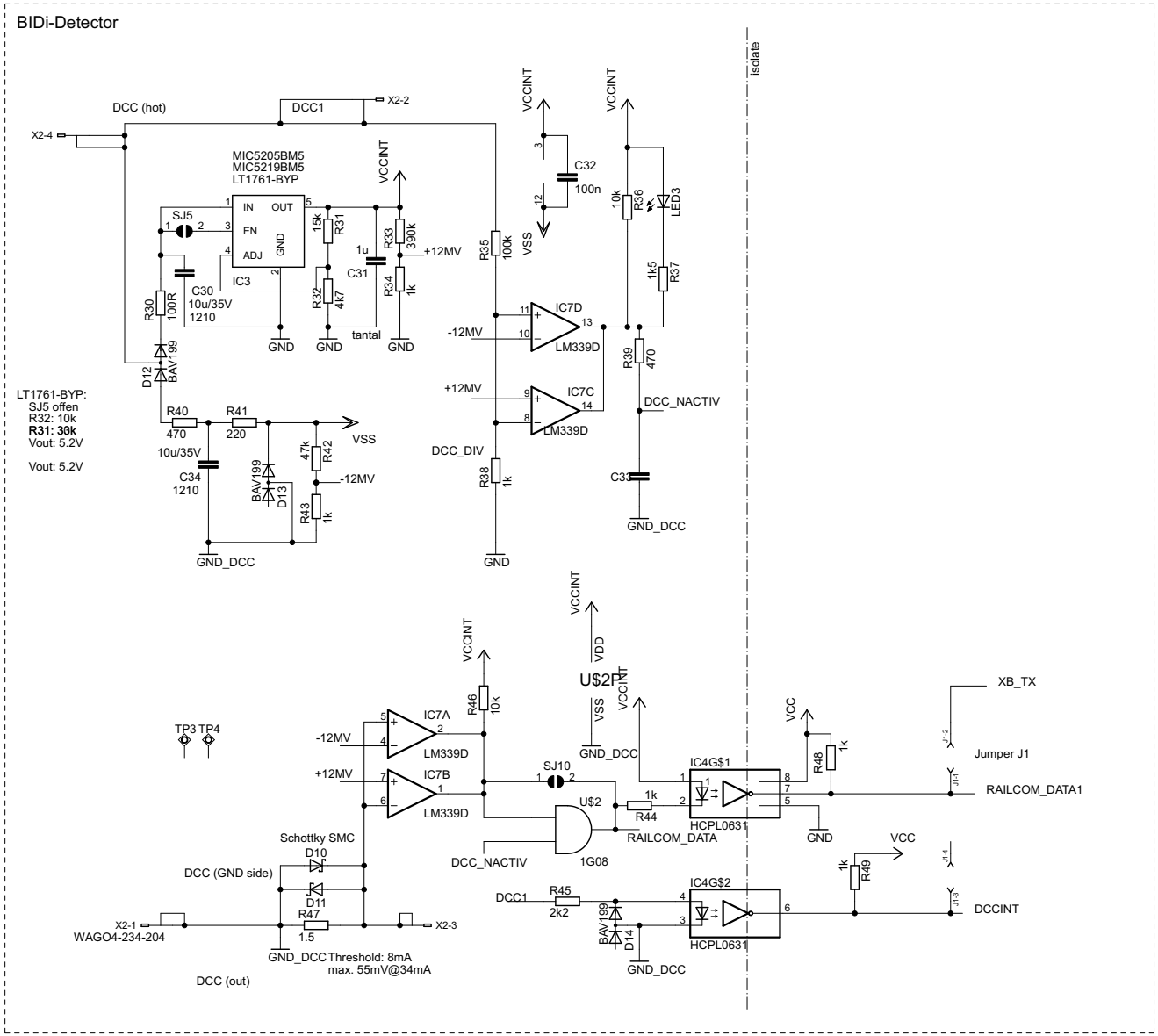

DCC/BiDi Detector	Gateway V1.2
	25.07.2010 20:50:40
	Sheet: 3/3